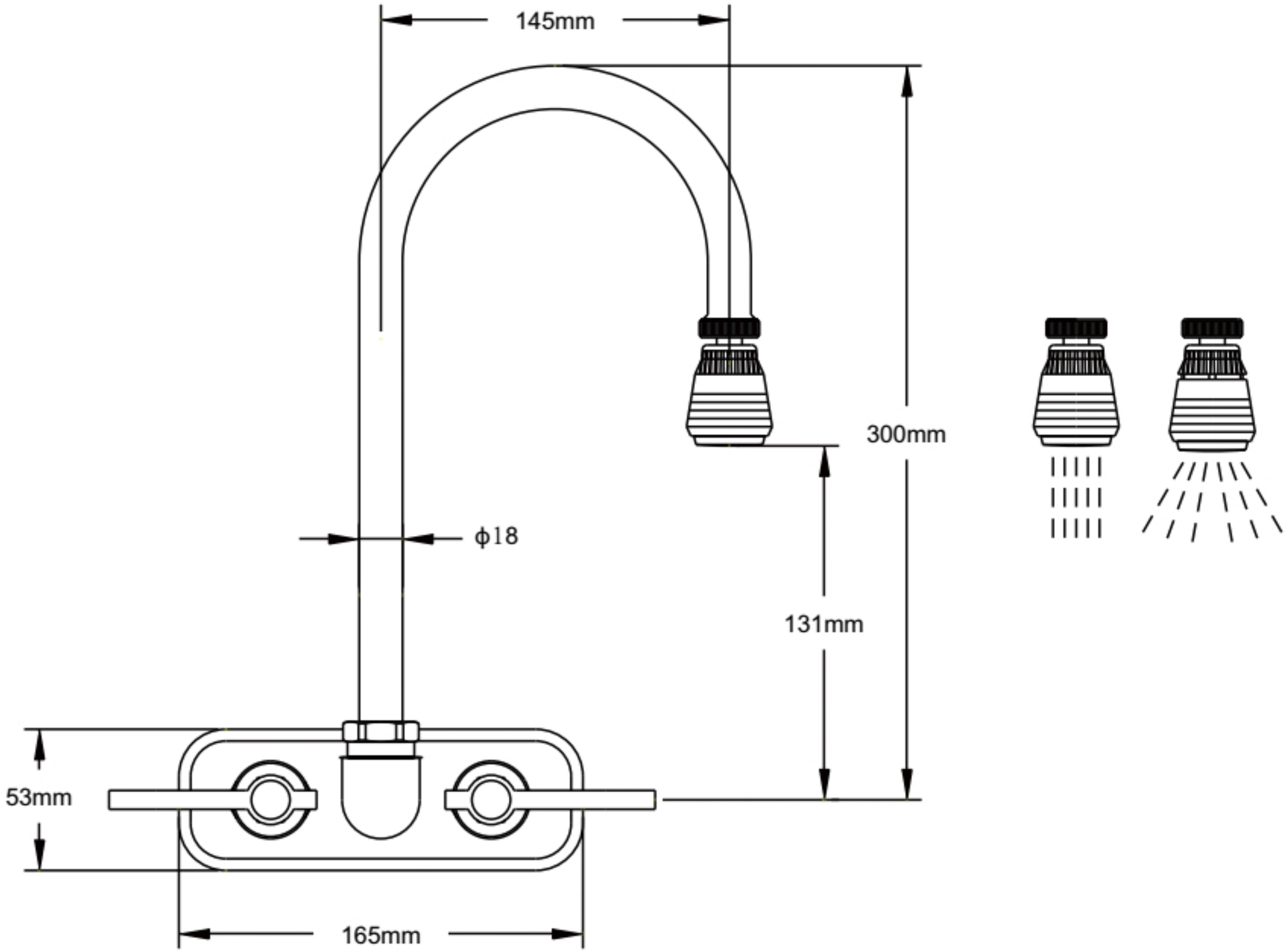
145mm
300mm
ϕ18
131mm
53mm
165mm

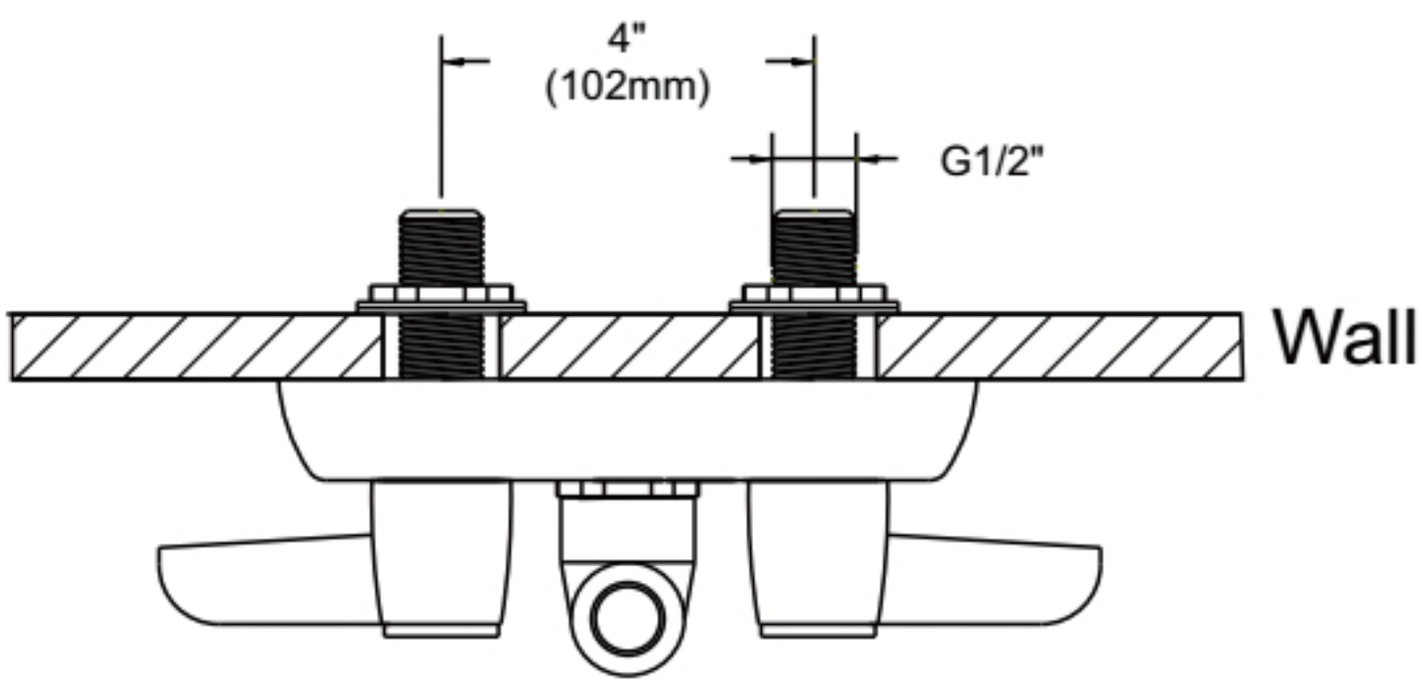
4"
(102mm)
G1/2"
Wall