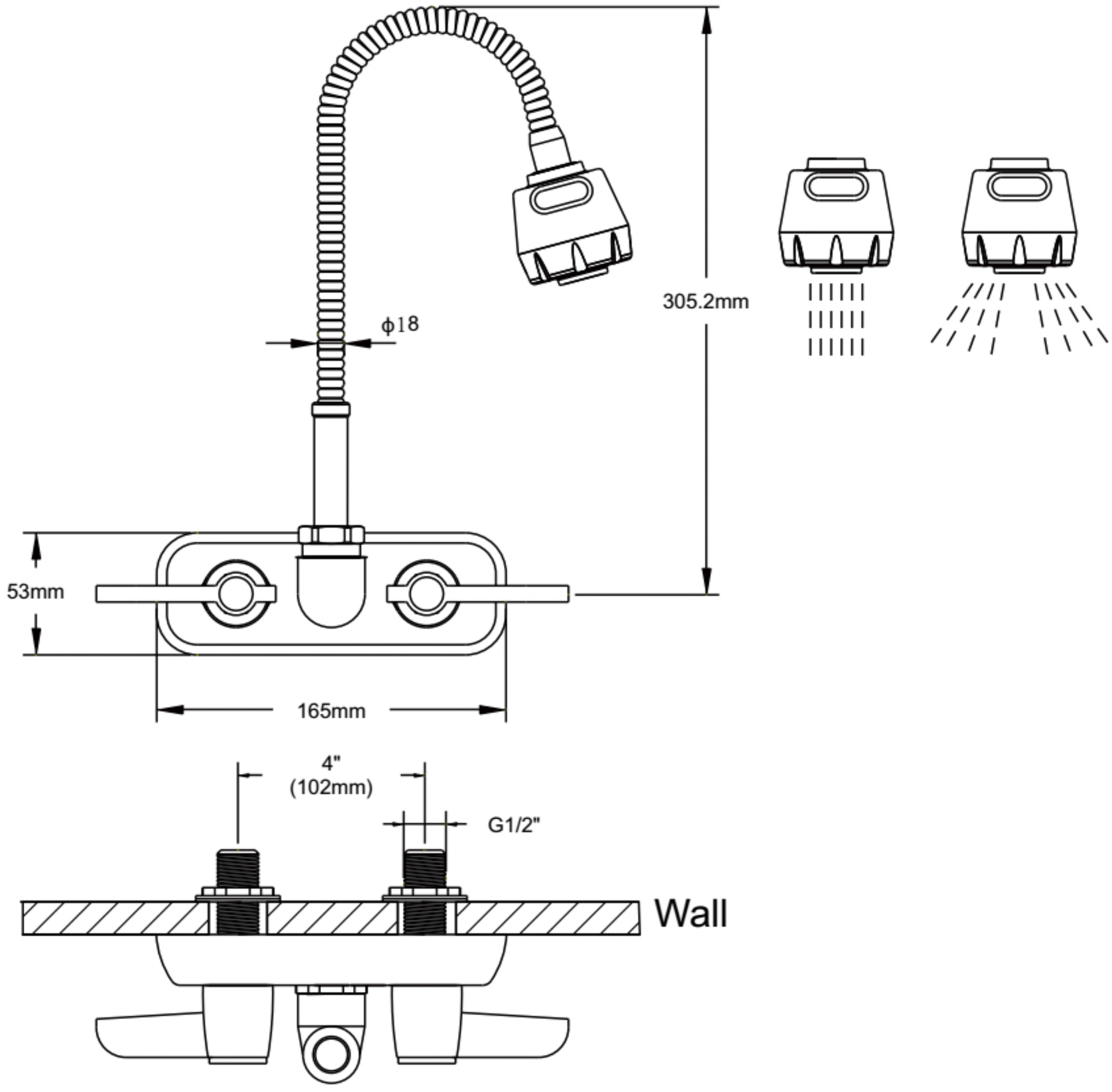
305.2mm
ϕ18
53mm
165mm
4"
(102mm)
G1/2"
Wall