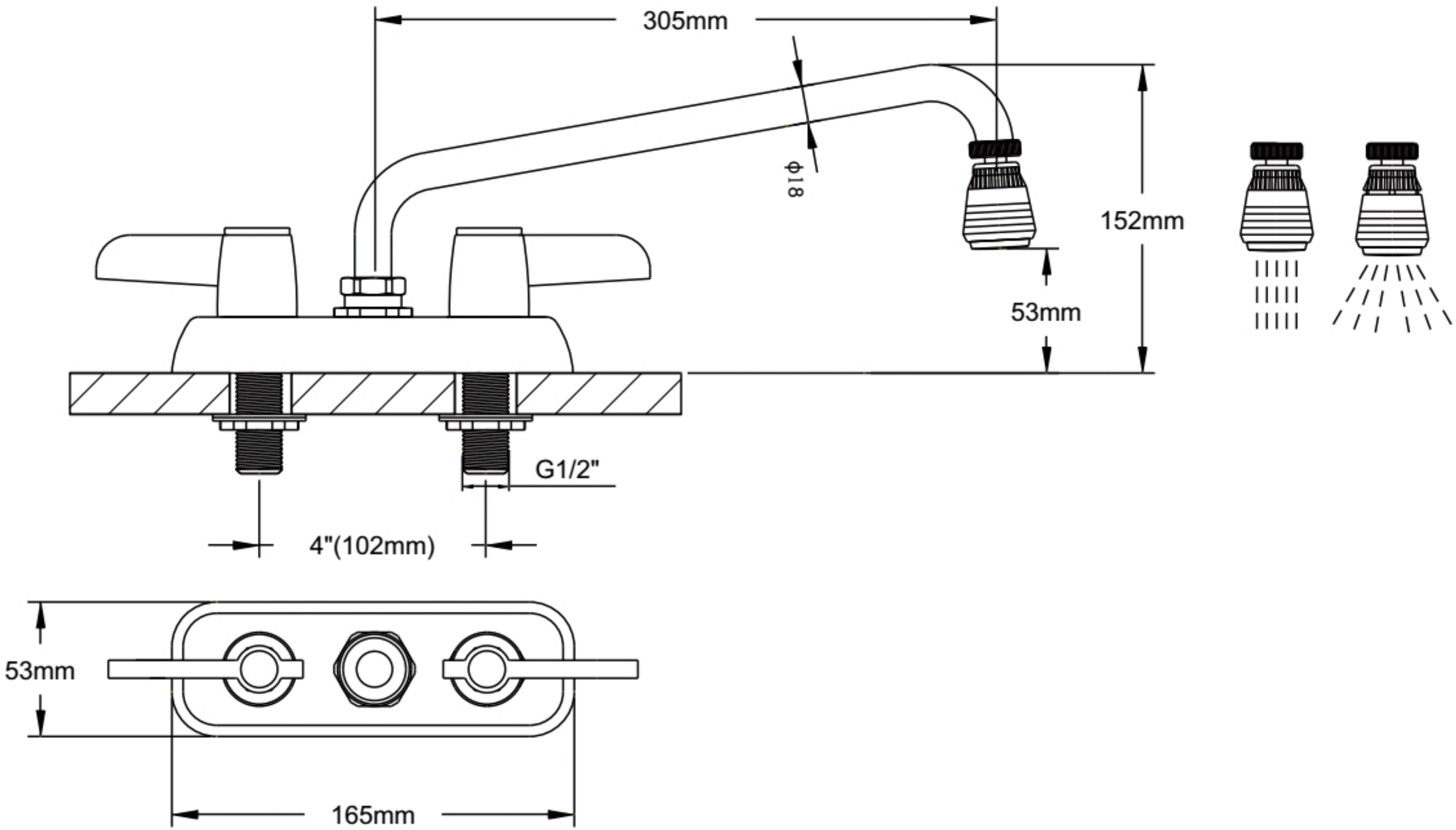
305mm
Φ18
152mm
53mm
G1/2"
4"(102mm)
53mm
165mm