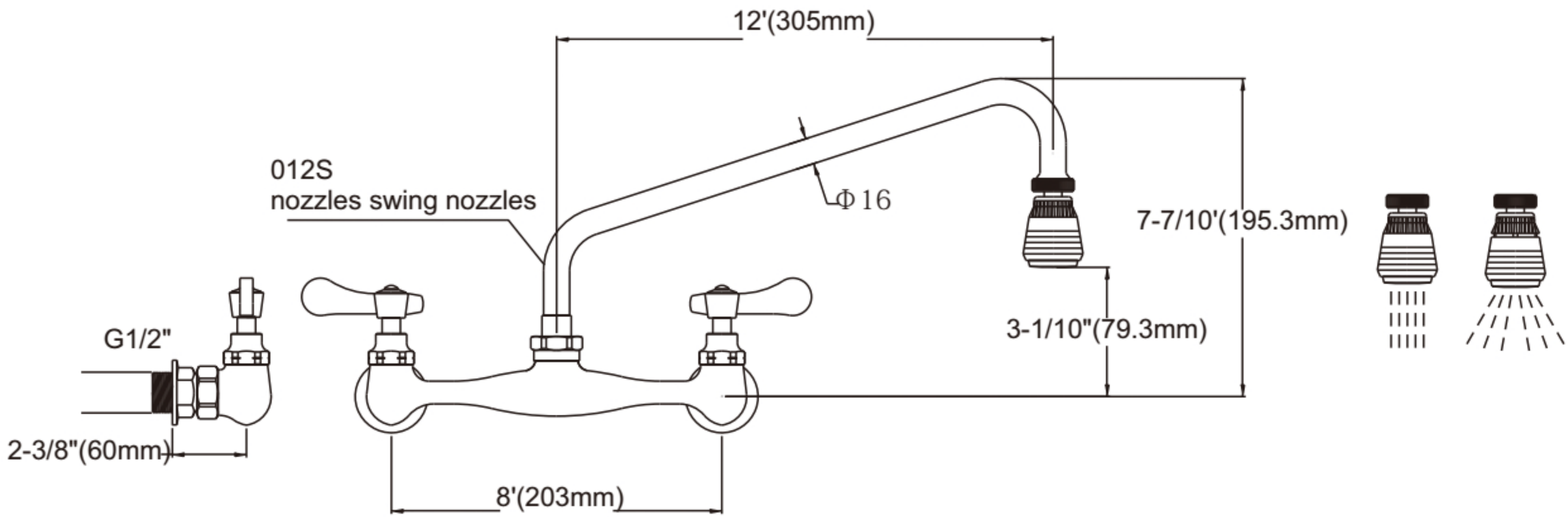
12'(305mm)
012S
nozzles swing nozzles
Φ16
7-7/10'(195.3mm)
3-1/10"(79.3mm)
G1/2"
2-3/8"(60mm)
8'(203mm)